MCR Sportster F-PBCF

Ground system - Starter - Ignition (V2)
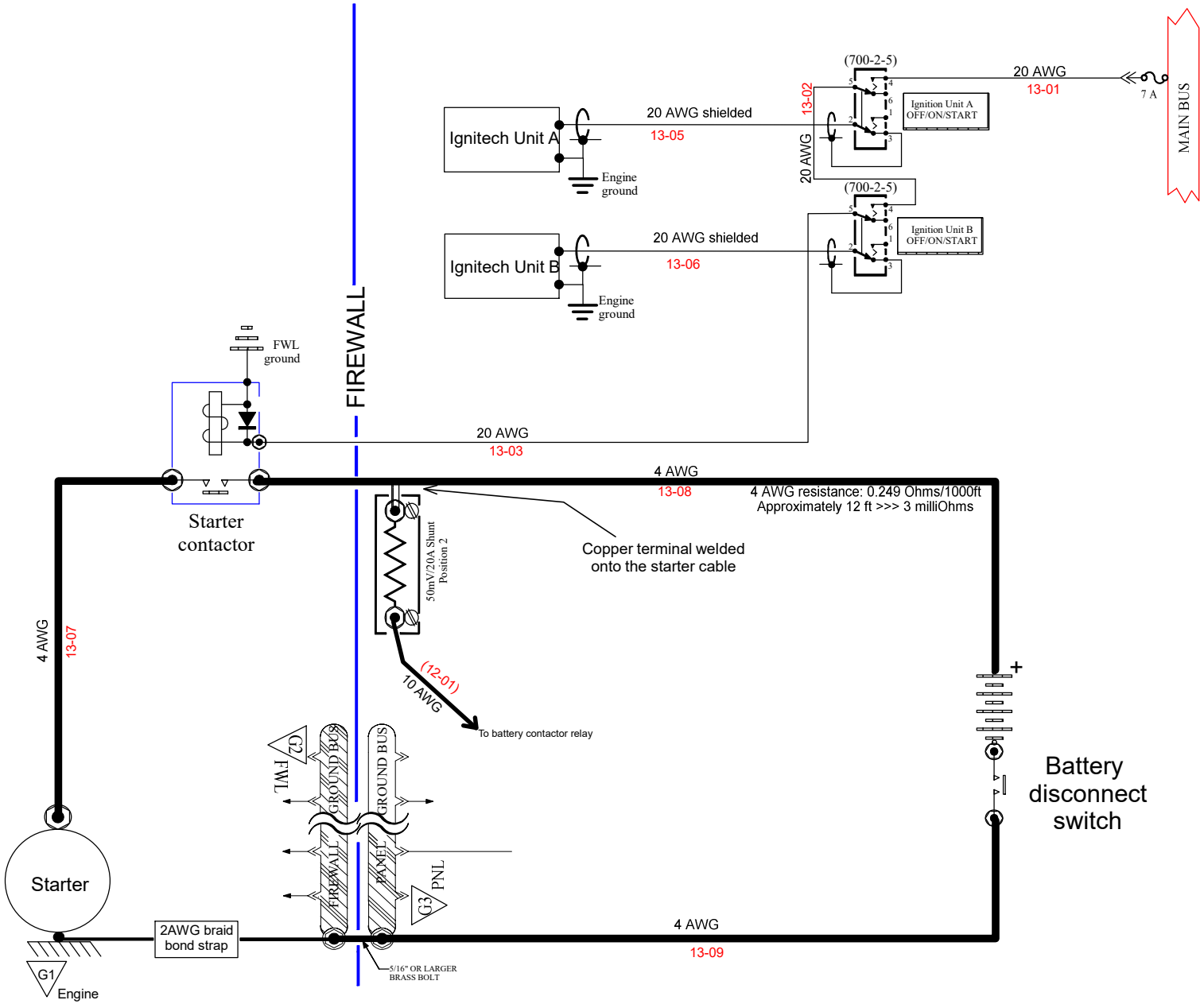
(13-00)